GRAPHIC LCM 128X64 WITH GPIO INTERFACE

GPIO

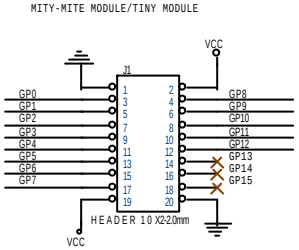

(2.0mm)

GRAPHIC LCM 128X64

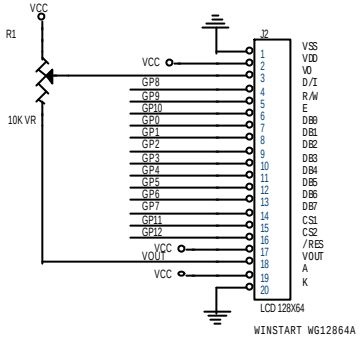

GP0..GP12 : LCD INTERFACE

DM&P ELECTRONICS CO.,LTD.		
Title: LCM 128X64 DISPLAY WITH GPIO		
Size: B	Document Number: L128X64.SCH	Rev: 1.0
Date: Wednesday, March 27, 2002	Sheet 1 of 1	