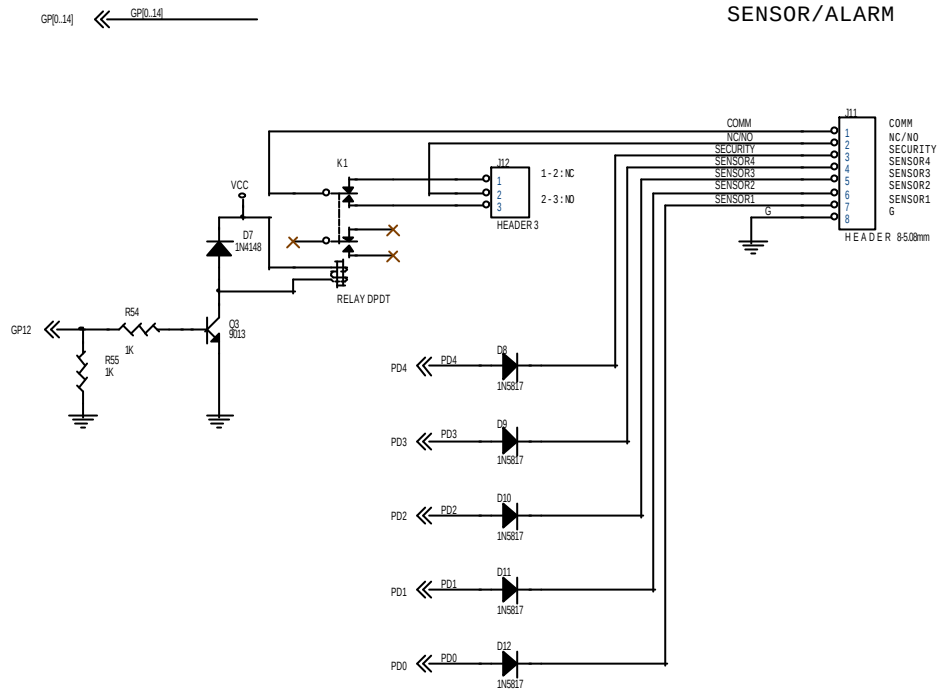

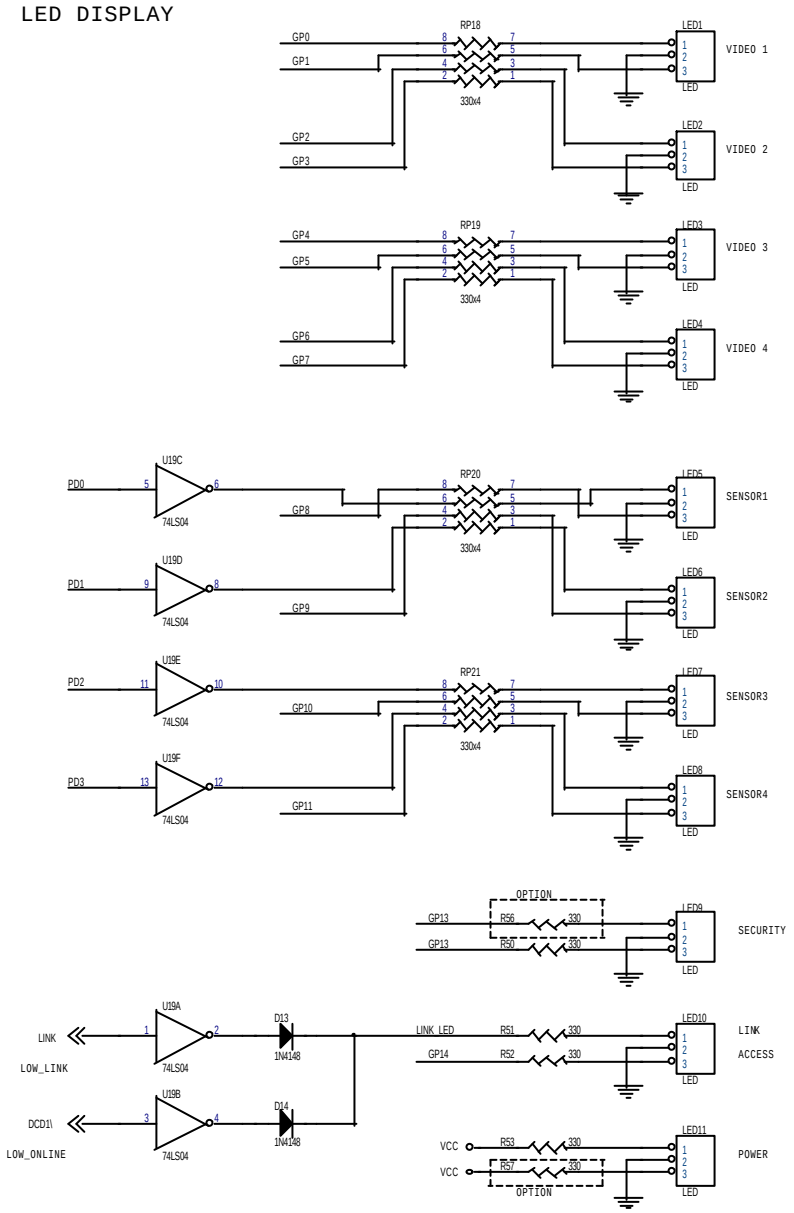

DM&P ELECTRONICS CO.,LTD.		
Title: WEBCAMERA INPUT/OUTPUT		
Size: B	Document Number: 9.SCH	Rev: 1.0
Date: Wednesday, September 19, 2001	Sheet 9 of 9	